QUANTITY: 4
MATERIAL: CRS AS SHOWN

HUB Notes:
1. Coordinate with seal used.
(Designed for seal 3/16" W x 1"OD)
2. Coordinate ID of hub with bushing used.
Bushing to be .875" OD x .75" ID x ???" L

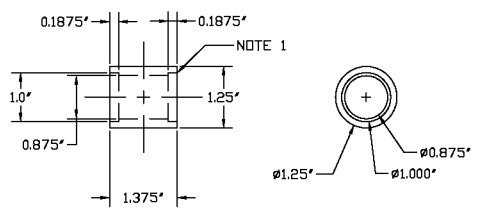

Detail
Outboard Hub

QUANTITY: 4
MATERIAL: CRS AS SHOWN

HUB NOTES:
1.Taper not shown in this view.
Coordinate with matching taper of
Metalastic bushing used.

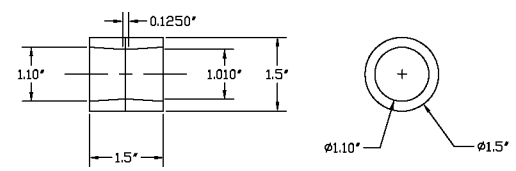

Detail
Inboard Hub

measure
metalasic
piece for
angle

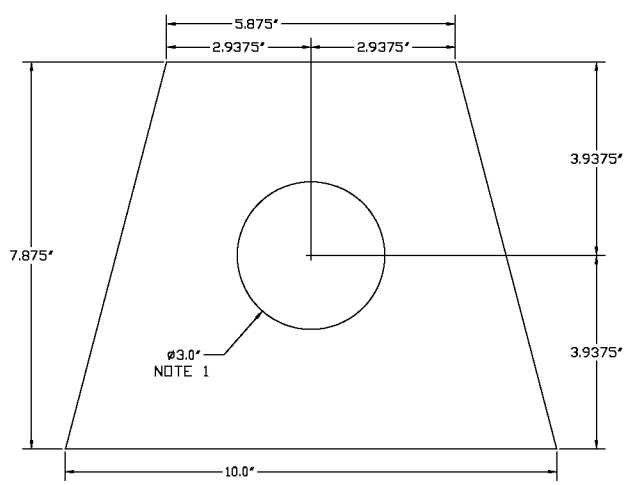

Detail
Gusset Plate

GUSSET PLATE NOTES:
1. FORMED HOLE SIZE AS SHOWN
WITH 1/4" RADIUS ON EDGES.

QUANTITY: 2
MATERIAL: .065"

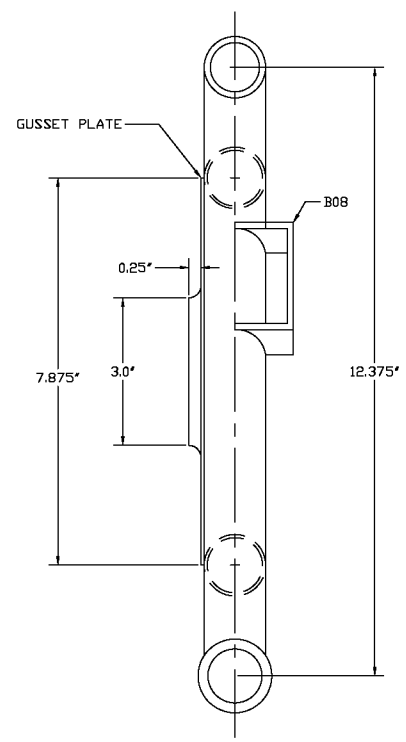

Assebbly
Right Side - Front View

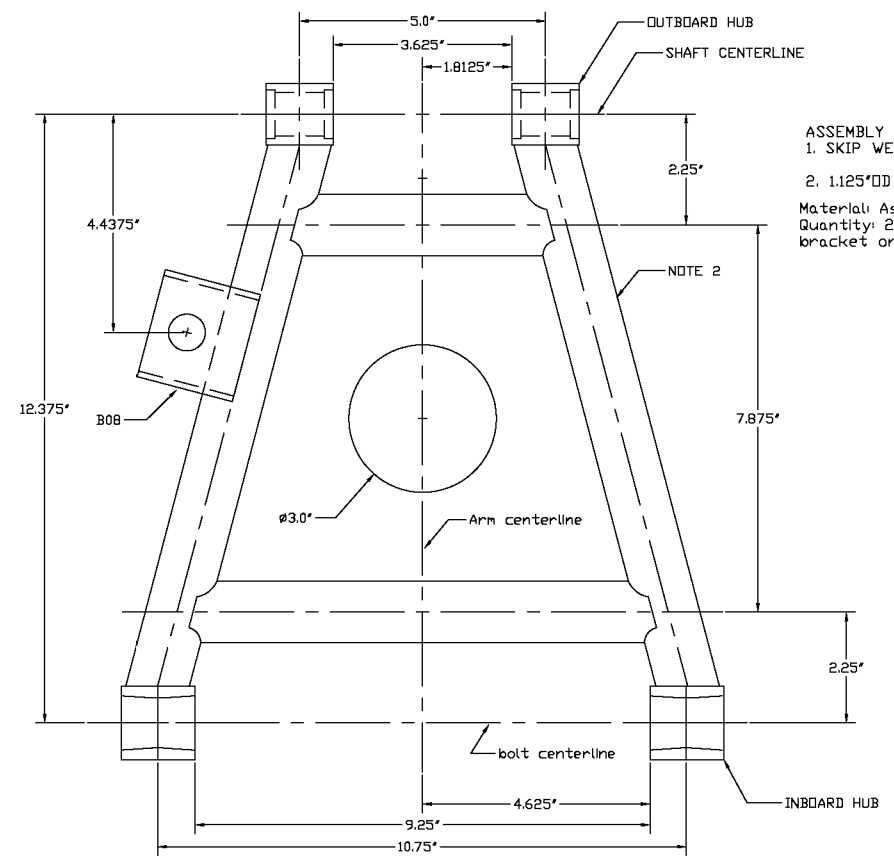

Assebly
Right Side - Top View

ASSEMBLY Notes:
1. SKIP WELD GUSSET TO TUBES.

2. 1.125"OD x .095" WALL DOM TUBEING

Material: As noted
Quantity: 2 (1 as shown and 1 mirror image. Sway bar bracket on opposite side.)

DEVELOPMENT - RSA02
REAR SUSPSENSION A-ARM ASSEMBLY

1/07/05
REV: 1/11/05
Rev: 2/18/05

Rev.	Description	Date

FOR PRIVATE USE ONLY
Copying any part of this document without the written consent of the Developer CAL Cobras is prohibited.

Drawings developed by:
CAL COBRAS
Danville, CA.

289 RACK & PINION
COBRA ROADSTER

Line is 1 inch
at full scale
(If not 1" scale accordingly)

Scale
1" = 2"

Title
Rear A-arm

Drawing Number